Article 2: General Development Regulations

Division 4: Landscape Regulations

(Added 12-9-1997 by O-18451 N.S.; effective 1-1-2000.)

§142.0401 Purpose of Landscape Regulations

The purpose of these regulations is to minimize the erosion of slopes and disturbed lands through revegetation; to conserve energy by the provision of shade trees over *streets*, sidewalks, parking areas, and other paving; to conserve water through low-water-using planting and irrigation design; to reduce the risk of fire through site design and the management of flammable vegetation ; and to improve the appearance of the built environment by increasing the quality and quantity of landscaping visible from *public rights-of-way*, private streets, and adjacent properties, with the emphasis on landscaping as viewed from *public rights-of-way*.
(Added 12-9-1997 by O-18451 N.S.; effective 1-1-2000.)

§142.0402 When Landscape Regulations Apply

(a) This division applies to all proposed planting and irrigation work.

(b) Table 142-04A provides the applicable regulations and type of permit required by this division for the landscaping required in conjunction with the specific types of *development* proposals. Any project that proposes more than one of the types of *development* shown is subject to all of the regulations for each type of *development*.

Table 142-04A

Landscape Regulations Applicability

Type of *Development* Proposal			**Applicable Regulations**	**Required Permit Type/ Decision Process**
Column A	**Column B**	**Column C[1]**		
1. New *structures* that equal or exceed the *gross floor area* shown (Column B), and are proposing the type of *development* shown (Column C)	1,000 square feet	*Multiple Dwelling Unit* Residential *Development* or Commercial *Development*	142.0403-142.0407, 142.0409, and 142.0413	Building Permit/ Process One
	5,000 square feet	Industrial *Development*		
2. Additions to *structures* or additional *structures* on developed properties that exceed the *gross floor area* shown or that increase the *gross floor area* by the percent shown (Column B), and are proposing the type of *development* shown (Column C)	1,000 square feet or a 20 percent increase in *gross floor area*	*Multiple Dwelling Unit* Residential *Development*	142.0403-142.0407, 142.0409, 142.0410 (a), and 142.0413	Building Permit/Process One
	1,000 square feet or a 10 percent increase in *gross floor area*	Commercial *Development*		
	5,000 square feet or a 20 percent increase in *gross floor area*	Industrial *Development*		
3. New permanent parking and *vehicular use area* for four or more vehicles including access to the spaces, excluding parking for *single dwelling unit* uses on a single *lot* in *single dwelling unit* zones and small *lot subdivisions* in accordance with Section 143.0365			142.0403, 142.0406-142.0409, and 142.0413	Construction Permit/ Process One
4. New temporary parking and *vehicular use area* for four or more vehicles including access to the spaces, excluding parking for *single dwelling unit* uses on a single *lot* in *single dwelling unit* zones			142.0403, 142.0408, 142.0409, and 142.0413	Construction Permit/ Process One

Type of *Development* Proposal		**Applicable Regulations**	**Required Permit Type/ Decision Process**
5.	Additions or modifications to existing permanent or temporary parking and *vehicular use area* that increase the number of parking spaces by four or more	142.0403, 142.0408, 142.0409, 142.0410 (b), and 142.0413	Construction Permit/ Process One
6.	*Single dwelling unit* residential use projects proposing new private or *public rights-of-way*	142.0403, 142.0409, and 142.0413	Construction Permit/ Process One
7.	Projects proposing slopes with gradients steeper than 4:1 (4 horizontal feet to 1 vertical foot) that are 5 feet or greater in height	142.0403, 142.0411, and 142.0413	Construction Permit/ Process One
8.	Projects creating disturbed areas of bare soils, or projects with existing disturbed areas	142.0403, 142.0411, and 142.0413	No permit required by this division
9.	All City owned property, dedicated in perpetuity for park or recreation purposes, within 100 feet of a structure.	142.0403 142.0412 142.0413	No permit required by this division if work is performed in accordance with applicable regulations
10.	Publicly or privately owned *premises,* that are within 100 feet of a *structure,*-and contain native or naturalized vegetation.	142.0403, 142.0412, and 142.0413	No permit required by this division if work is performed in accordance with applicable regulations
11.	New *structures*, additions to *structures*, or subdivisions that create *lots* where new *structures* could be located on *premises* adjacent to native or naturalized vegetation	142.0403, 142.0412, and 142.0413	Building Permit/ Process One

12. New Trees or shrubs planted in the *public right-of-way*	62.0603, 129.0702, 142.0403 142.0409 and 142.0610	Public Right-of-Way Permit or Street Tree Permit/ Process One
13. *Condominium Conversions*	142.0403, 142.0404, 142.0405 (b)(1) 142.0409 (a), 142.0412, and 142.0413	No permit required by this division
14. Commercial *development* with at least 1,000 square feet of landscape area	142.0403 142.0413	No permit required by this division
15. Small *Lot Subdivision*	142.0403 142.0404 142.0413	No permit required by this division

Footnote to Table 142-04A

[1] Refer to Section 131.0112 for a description of the types of uses that fit into each *development* category.

(Added 12-9-1997 by O-18451 N.S.; effective 1-1-2000.)
(Amended 9-19-2005 by O-19413 N.S.; effective 10-19-2005)
(Amended 11-28-2005 by O-19444 N.S.; effective 2-9-2006.)
(Amended 7-5-2006 by O-19505 N.S.; effective 8-5-2006.)
(Amended 1-15-2008 by O-19698 N.S.; effective 2-14-2008.)
(Amended 11-13-08 by O-19800 N.S; effective 12-13-2008.)
(Amended 8-4-2011 by O-20081 N.S.; effective 10-6-2011.)
(Amended 6-18-2013 by O-20261 N.S.; effective 7-19-2013.)
(Amended 5-5-2015 by O-20483 N.S.; effective 6-4-2015.)
(Amended 4-5-2016 by O-20634 N.S.; effective 5-5-2016.)

[Editors Note: Amendments as adopted by O-20634 N.S. will not apply within the Coastal Overlay Zone until the California Coastal Commission certifies it as a Local Coastal Program Amendment.
Click the link to view the Strikeout Ordinance highlighting changes to prior language http://docs.sandiego.gov/municode_strikeout_ord/O-20634-SO.pdf]

§142.0403 General Planting and Irrigation Requirements

All planting, irrigation, brush management, and landscape-related improvements required by this division must comply with the regulations in this section and with the Landscape Standards in the Land Development Manual.

(a) Plant Point Schedule

Table 142-04B assigns plant points based on plant type and size and applies where plant points are required by this division.

Table 142-04B
Plant Point Schedule

Proposed Plant Material		**Plant Points Achieved per Plant**
Plant Type	**Plant Size**	
Proposed Shrub	1-gallon	1.0
	5-gallon	2.0
	15-gallon or larger	10.0
Proposed Dwarf Palm	Per foot of brown trunk height	5.0
Proposed Tree	5-gallon	5.0
	15-gallon	10.0
	24-inch box	20.0
	36-inch box	50.0
	48-inch box and larger	100.0
Proposed Broad Headed Feather Palm Tree	Per foot of brown trunk height	5.0
Proposed Feather Palm Tree	Per foot of brown trunk height up to 20 feet in height	3.0
	each feather palm tree over 20 feet in height	60.0
Proposed Fan Palm Tree	Per foot of brown trunk height up to 20 feet in height	1.5
	each fan palm tree over 20 feet in height	30.0

Existing Plant Material		Plant Points Achieved per Plant
Plant Type	**Plant Size**	
Existing Shrub	12-inch to 24-inch spread and height	4.0
	24-inch and larger spread and height	15.0
Existing Native Tree	2-inch caliper measured at 4 feet above *grade*	100.0
	each additional inch beyond 2 inches	50.0
Existing Non-Native Tree	2-inch caliper measured at 4 feet above *grade*	50.0
	each additional inch beyond 2 inches	25.0
Existing Broad Headed Feather Palm Tree	Per foot of brown trunk height	5.0
Existing Feather Palm Tree	Per foot of brown trunk height up to 20 feet in height	3.0
	each feather palm tree over 20 feet in height	60.0
Existing Fan Palm Tree	Per foot of brown trunk height up to 20 feet in height	1.5
	each fan palm tree over 20 feet in height	30.0

(b) Plant Material Requirements

(1) Planting of invasive plant species, as described in the Landscape Standards of the Land Development Manual, is not permitted.

(2) All existing, invasive plant species, including vegetative parts and root systems, shall be completely removed from the *premises* when the combination of species type, location, and surrounding environmental conditions provides a means for the species to invade other areas of native plant material that are on or off of the *premises*.

(3) Plant material species shall be used that will continue to meet the requirements of this division after installation.

(4) Tree locations shall be measured horizontally from the centerline of the tree trunk at *proposed grade*.

(5) A minimum root zone of 40 square feet in area shall be provided for all trees. The minimum dimension for this area shall be 5 feet. This minimum dimension and root zone area may be reduced with the use of structural soil or where the combination of soil conditions, root zone area, adjacent improvements, and selected tree species can be demonstrated to provide conditions for healthy tree growth that will not damage adjacent improvements.

(6) Plant material shall be maintained in a healthy, disease-free, growing condition at all times.

(7) All pruning shall comply with the standards of the National Arborist Association.

(8) Any plant material required by this division that dies within 3 years of installation shall be replaced within 30 calendar days of plant death with the same size and species of plant material shown on the approved plan. Required shrubs that die 3 years or more after installation shall be replaced with 15-gallon size, and required trees that die 3 years or more after installation shall be replaced with 60-inch box size material. The City Manager may authorize adjustment of the size and quantity of replacement material where material replacement would occur in inaccessible areas or where the existing plant being replaced is larger than a 15 gallon shrub or 60-inch box tree.

(9) Trees required by this division shall be self-supporting, woody plants with at least one well defined trunk and shall normally attain a mature height and spread of at least 15 feet.

(10) Trees required by this division shall be maintained so that all branches over pedestrian walkways are 6 feet above the walkway *grade* and so that all branches over vehicular travel ways are 16 feet above the *grade* of the travel way.

(11) Shrubs required by this division shall be woody or perennial plants that are low branching or have multiple stems.

(12) Tree root barriers or structural soil shall be installed where trees are placed within 5 feet of *public improvements* including walks, curbs, or *street* pavement or where new public improvements are placed adjacent to existing trees. The City Manager may waive this requirement where the combination of soil conditions, root zone area, adjacent improvements, and selected tree species can be demonstrated to provide conditions for healthy tree growth that will not damage public improvements.

(13) Native plants shall be locally indigenous.

(14) Naturalized plant material shall be plantings that can survive without irrigation after initial plant establishment.

(15) Plant materials shall be grouped into hydrozones that consist of plant species having similar water demand and by their soil, sun, and shade requirements.

(16) Plant material shall be selected to meet a maximum applied water allowance as determined by the water budget formula and specifications in Section 142.0413(d).

(c) Irrigation Requirements

(1) All required plant material shall be irrigated with a permanent, below-grade irrigation system unless specified otherwise in this division.

(2) All required irrigation systems shall be automatic, electrically controlled, and designed to provide water to all required plantings to maintain them in a healthy, disease-resistant condition.

(3) Irrigation systems shall meet the following design requirements:

(A) No irrigation runoff or overspray shall cross *property lines* or paved areas;

(B) The velocity of water flowing in irrigation system piping or supply pipes shall not exceed 5 feet per second downstream of the water meter;

(C) Irrigation systems shall be designed to minimize system maintenance requirement after installation. Above-ground irrigation system equipment that is exposed to potential damage shall be designed to be damage-resistant; and

(D) An approved rain sensor shutoff device is required for all systems and a moisture-sensing device that regulates the irrigation system for all lawn areas is required.

(d) Planting Area Requirements

(1) Planting areas required by this division shall consist of the following:

(A) Low-growing woody or herbaceous groundcover, turf, shrubs, or trees;

(B) Unattached unit pavers, loose organic or inorganic materials, or *hardscape*; or

(C) Built improvements including water features, overhead *structures* (such as gazebos, trellis *structures*, etc.), or fixed seating.

(2) Planting areas may be counted toward the planting area required by this division if they are greater than 30 square feet in size with no dimension less than 3 feet.

(3) All required planting areas shall be maintained free of weeds, debris, and litter.

(Added 12-9-1997 by O-18451 N.S.; effective 1-1-2000.)
(Amended 9-19-2005 by O-19413 N.S.; effective 10-19-2005.)
(Amended 11-13-08 by O-19800 N.S; effective 12-13-2008.)
(Amended 10-28-2009 by O-19903 N.S; effective 11-27-2009.)

EDITORS NOTE: The Land Development Manual includes:

Coastal Bluffs and Beaches Guidelines
Biology Guidelines
Historical Resources Guidelines
Submittal Requirements for Deviations within the Coastal Overlay Zone

See RR-292248 for the Coastal Bluffs and Beaches Guidelines of the Land Development Code; RR-292249 for the Biology Guidelines of the Land Development Code; RR-292250 for the Historical Resources Guidelines of the Land Development Code; RR-292251 for the Submittal Requirements for Deviations within the Coastal Overlay Zone of the Land Development Code.

§142.0404 Street Yard and Remaining Yard Planting Area and Point Requirements

When new *structures* or additions to *structures* are subject to this section in accordance with Table 142-04A, the planting area required and the plants necessary to achieve the number of plant points required in Table 142-04C shall be provided. The required planting area is determined by multiplying the total square footage of the *street yard* or *remaining yard* area on the *premises*, by the percentage shown in Table 142-04C, unless stated otherwise in the table. The required planting points are determined by multiplying the total square footage of the *street yard* or *remaining yard* area on the *premises*, by the points shown in the table. The required planting area and plant points for the *street yard* shall be located within the *street yard*. The required planting area and plant points for the *remaining yard* shall be located within the *remaining yard*.

Table 142-04C
Street Yard and Remaining Yard Planting Requirements

Type of *Development* Proposal [6]	**Type of *Yard***	**Planting Area Required** (Percentage of total *yard* area unless otherwise noted below)[1]	**Plant Points Required**[1]
Multiple Dwelling Unit Residential *Development*	*Street Yard*	50%[2]	0.05 points
	Remaining Yard	A minimum of 40 square feet shall be provided per required tree	60 points shall be provided for each residential building[2]
Condominium Conversion	*Street Yard*	50%[5]	0.05 points
	Remaining Yard	N/A	N/A
Small *Lot Subdivision*	*Street Yard*	50%[5]	0.05 points per square foot of total *street yard* area
	Remaining Yard	N/A	
Commercial *Development,* or Industrial *Development* in Commercial Zones	*Street Yard*	25%[3]	0.05 points per square foot of total *street yard* to be achieved with trees only[3]
	Remaining Yard	30%[3]	0.05 points per square foot of total *remaining yard*
Industrial *Development* in any zone other than Commercial Zones	*Street Yard*	25%[4]	0.05 points per square foot of total *street yard*
	Remaining Yard	See Section 142.0405 (d)	0.05 points per square foot of total *remaining yard*

Large retail establishments in any Commercial Zone.	*Street Yard*	100% [3]of minimum building front and street side setbacks (except access points and with encroachments allowed into the landscaped area for building articulation elements as defined in section 143.0355(a)(b)) 25% of the balance of *street yard*	0.05 points, exclusive of palms
	Remaining Yard	30%[3]	0.05 points
Large retail establishments in any Industrial Zone.	*Street Yard*	25% [4]	0.05 points, exclusive of palms
	Remaining Yard	30%	0.05 points

Footnotes to Table 142-04C

1 See Section 142.0405(a)
2 See Section 142.0405(b)
3 See Section 142.0405(c)
4 See Section 142.0405(d)
5 See Section 142.0405(b)(1)
6 Refer to Section 131.0112 for a description of the types of uses that fit into each *development* category.

(Added 12-9-1997 by O-18451 N.S.; effective 1-1-2000.)
(Amended 7-5-2006 by O-19505 N.S.; effective 8-5-2006.)
(Amended 6-15-2007 by O-19624 N.S.; effective 7-15-2007.)
(Amended 11-13-08 by O-19800 N.S; effective 12-13-2008.)
(Amended 5-5-2015 by O-20483 N.S.; effective 6-4-2015.)
(Amended 4-5-2016 by O-20634 N.S.; effective 5-5-2016.)

[Editors Note: Amendments as adopted by O-20634 N.S. will not apply within the Coastal Overlay Zone until the California Coastal Commission certifies it as a Local Coastal Program Amendment.
Click the link to view the Strikeout Ordinance highlighting changes to prior language http://docs.sandiego.gov/municode_strikeout_ord/O-20634-SO.pdf]

§142.0405 Additional Yard Planting Area and Point Requirements

(a) Additional *yard* requirements for all *development*:

(1) Unless specified otherwise in Table 142-04C, at least one-half of the required planting points shall be achieved with trees.

(2) If plants and planting area are provided within a *street yard* or *remaining yard* to meet other requirements of this division, including *vehicular use area* and revegetation requirements, they may be used to satisfy the planting area and plant points required by Table 142-04C.

(3) A point score in excess of that required for a yard area may be used to reduce the planting area required for that yard area at a rate of one square foot of area reduction for each excess point provided. The maximum planting area reduction allowed by this section is 25 percent of that total yard area required.

(b) Additional residential *yard* requirements:

(1) *Street Yard*

(A) A minimum separation of 5 feet shall be maintained between driveway edges located in the *street yard*.

(B) Up to 10 percent of the required *street yard* planting area located outside the *vehicular use area* for *multiple dwelling unit* residential *development* may consist of *hardscape* or unattached unit pavers.

(C) Planting area in the *public right-of-way* is not counted towards fulfillment of the required *street yard* planting area.

(2) *Remaining Yard*

(A) Residential *development* with only two *dwelling units* on a *lot* shall be subject to a minimum of 60 points in the *remaining yard* regardless of the number of buildings on the *lot*.

(B) Planting for residential *developments* with a single building shall be provided within the *remaining yard* on the side of building access, or where no side access is provided, shall be distributed equally between each side of the building.

(C) A minimum distance of 6 feet shall be provided between any tree and building.

(c) Additional commercial *yard* and *large retail establishment* requirements:

(1) All of the required *street yard* planting area located outside the *vehicular use area* for commercial zones or commercial development except for auto service stations, may consist of *hardscape* or unattached unit pavers. This does not include the minimum planting area required for trees and the planting area necessary to provide for healthy plant growth.

(2) For auto service stations, the required *street yard* planting area is 15 percent of the *street yard* area, and the required plant points are 0.03 points for each square foot of the *street yard*.

(3) Where commercial *development* abuts a residential zone, a 5-foot wide area along the entire abutting *property line* shall be planted with trees to achieve a minimum of .05 points per square foot of area in addition to the points required in the *remaining yard*.

(4) Façade Planting Area for *large retail establishments*. Within the *street yard,* a façade planting area, as shown in Diagram 142-04A shall be provided between the *vehicular use area* and the *street wall*. This façade planting area shall be planted with a minimum of 20 points (trees only) at a linear rate of 30 feet of building *street wall* wherever trellises, arcades, awnings or extended covered entries do not occur which shall be a minimum of 30 percent of the length of the building *street wall*.

Diagram 142-04A

Façade Planting Area for *Large Retail Establishments*

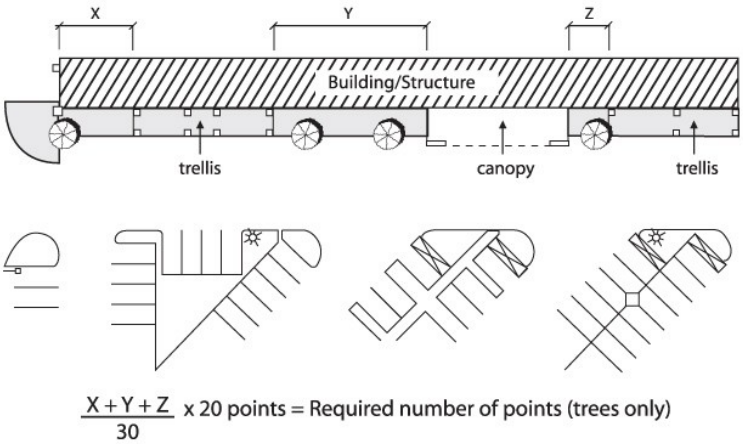

X + Y + Z = minimum of 30% of the length of the building street wall

(d) Additional industrial *yard* and *large retail establishment* requirements:

(1) Perimeter Planting Area. Within the *street yard* for industrial zones or industrial *development*, a 5-foot-wide perimeter planting area adjacent to each side *property line*, as shown in Diagram 142-04B, shall be provided for the full depth of the *street yard* except where vehicular access (maximum 25 feet) and pedestrian access (maximum 6 feet) points cross perpendicular to a side *property line*. This planting area shall be planted with a combination of trees and shrubs that achieves 0.2 points per square foot of the required area. Where loading docks are placed along more than 25 percent of the *street wall* length in the IL and IH zones, the perimeter planting area points required shall be increased to 0.5 points per square foot of area.

Diagram 142-04B

Industrial Perimeter Planting Area

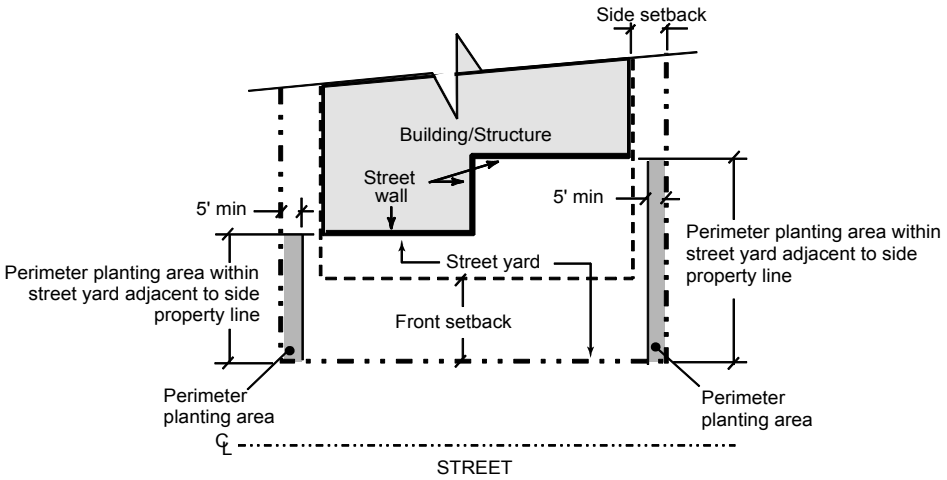

(2) Facade Planting Area. Within the *street yard*, a facade planting area, as shown in Diagram 142-04C, shall be provided that abuts the *street wall* and is at least equal to 50 percent of the length as determined by adding the lines connecting the outermost points of the structure along the street wall as shown in Diagram 142-04D, and that has a width of at least 9 feet measured perpendicularly to the building. This requirement shall not apply to *large retail establishments*.

Diagram 142-04C

Industrial Facade Planting Areas

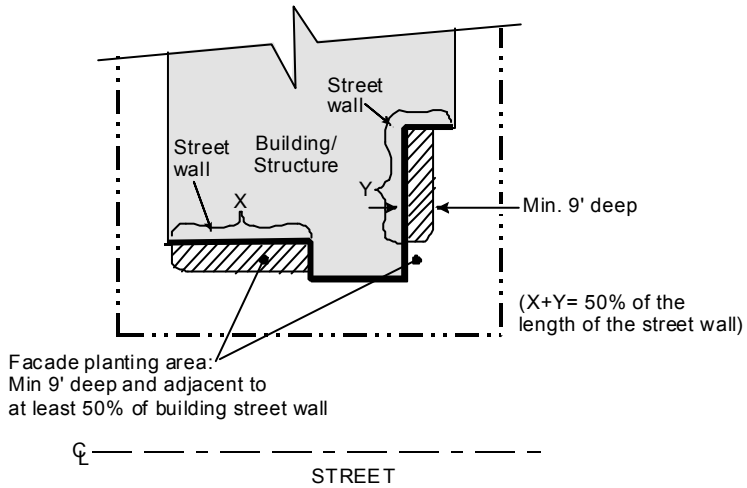

Diagram 142-04D

Industrial Facade Area Street Wall Length

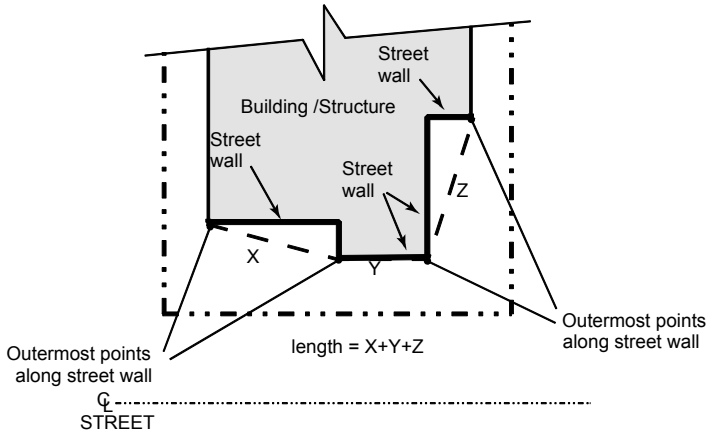

The facade planting area shall be planted with a combination of trees and shrubs that achieves 0.5 points per square foot. Trees within this area must have a typical growth rate that can achieve a height of at least 20 feet within 8 years of being planted. Shrubs at maturity shall achieve a minimum height of 4 feet. In lieu of meeting the facade planting area and point requirements, the *applicant* may do one of the following:

(A) Increase the required perimeter planting area width to 10 feet and the required *street yard* plant points to 0.1; or

(B) Place a minimum 6-foot-high solid wall between the *setback line* and the front of the *structure* that shall extend along the full width of the property, except at access points. The applicant shall provide tree plantings equal to one half of the required facade area planting points between the wall and the building street wall.

(3) Where loading docks are located along more than 25 percent of the *street wall* length, all *street yard* plant points shall be increased to 0.1 per square foot of *street yard* area.

(4) For industrial uses in industrial zones, a planting area of at least 5 feet wide shall be provided within the *remaining yard*. This area shall be measured perpendicularly to the *property lines* adjacent to the *remaining yard* and shall abut the *property line*. The required planting points shall be placed within this 5 feet wide area.

(Added 12-9-1997 by O-18451 N.S.; effective 1-1-2000; amended 6-19-2000 by O-18814 N.S.; amended 6-19-2000 by O-18814 N.S.)
(Amended 6-15-2007 by O-19624 N.S.; effective 7-15-2007.)
(Amended 11-13-08 by O-19800 N.S; effective 12-13-2008.)

§142.0406 Vehicular Use Area Planting Area and Point Requirements

(a) When new *vehicular use areas* are subject to this section in accordance with Table 142-04A, the planting area, the plants necessary to achieve the number of plant points, and the trees required in Table 142-04D shall be provided. The required planting area is determined by multiplying the square footage of the *vehicular use area* located within the *street yard* and outside the *street yard* by the percentage shown in Table 142-04D. The required plant points are determined by multiplying the square footage of the *vehicular use area* located within the *street yard* and outside the *street yard* by the points shown in the Table 142-04D. The required area, points, and trees shall be located within the *vehicular use area* unless listed otherwise in the table.

Table 142-04D
Vehicle Use Area Requirements

Size of Proposed *Vehicular Use Area*	**Planting Area Required**(1), (2), (4)		**Plant Points Required**(1), (2)		**Tree Distribution Requirement**(1)
	Street yard	**Outside the *street yard***	***Street yard***	**Outside the *street yard***	
Less than 6,000 square feet	40 Square Feet per Tree	40 Square Feet per Tree	0.05 points	0.05 points	1 tree within 30 feet of each parking space(3)
6,000 square feet or greater	5% of vehicular use area located in the street yard	3% of vehicular use area located outside the street yard	0.05 points	0.03 points	1 tree within 30 feet of each parking space(3

Footnotes to Table 142-04D

1 See Section 142.0407(a)

2 See Section 142.0407(b)

3 See Section 142.0407(c)

4 See Section 142.0407(d)

(b) All planting areas and plants in or adjacent to a *vehicular use area* shall be protected from vehicular damage by providing a raised curb or wheel stop of at least 6 inches in height. Where the end of parking spaces abut a planting area that is less than 5 feet in width, 6-inch-high wheel stops or curbs shall be placed within the parking spaces, 2 feet from the edge of the planting area.

(c) A *vehicular use area* located within the *street yard* shall be separated from the curb in the *public right-of-way* by a required planting area totaling at least 8 feet in width, measured perpendicularly to the *public right-of-way*. This planting area shall meet the following requirements:

(1) The planting area shall extend along, and directly abut, the entire length of the *vehicular use area* except at vehicle or pedestrian access points.

(2) The planting area shall be planted to screen the *vehicular use area* with densely foliated, evergreen species that achieve a minimum height of 30 inches within 2 years of installation over at least 80 percent of the length of the required planting area. The *screening* may also be achieved through the use of berms, solid fencing, walls, plant material, or any combination of these that provides an equivalent *screen*.

(3) The width of this planting area may be reduced to 3 feet if a solid wall of at least 3 feet in height is provided for the entire length of the *vehicular use area*—for sites under 5 acres. Sites that are between 5 and 10 acres are required to provide the planting area buffer that is 8 feet. For sites over 10 acres, a planting area buffer must be 12 feet in width with a potential reduction to 8 feet with a 3 feet high wall. The remaining planting area shall be located between the wall and curb within the *public right-of-way* and planted with the equivalent of 1 shrub for every 10 feet of wall length. These shrubs shall achieve at least 18 inches in height of maturity.

(4) A point score in excess of that required for a *vehicular use area* may be used to reduce the planting area required for that *vehicular use area* at a rate of one square foot of area reduction for each excess point provided. The maximum planting area reduction allowed by this section is 25 percent of the total *vehicular use area* required.

(Added 12-9-1997 by O-18451 N.S.; effective 1-1-2000.)
(Amended 6-15-2007 by O-19624 N.S.; effective 7-15-2007.)

§142.0407 Additional Vehicular Use Area Requirements

(a) At least one-half of the required plant points are to be achieved with trees. If planting area and plants are provided within the boundaries of the *vehicular use area* to meet other requirements of this division including revegetation, *street yard*, and *remaining yard* requirements, they may be used to satisfy the planting area and planting points required by Table 142-04D.

(b) For a *vehicular use area* that is less than 6,000 square feet in size, the required plant points may be provided within 5 feet of the edge of the *vehicular use area*. For a *vehicular use area* 6,000 square feet or greater in size, the required planting area, points, and trees shall be located in the *vehicular use area* except for areas designated for commercial vehicle parking spaces, loading areas, and loading area accessways that are used for the distribution of materials and goods. They may be located within 5 feet of the edge of the *vehicular use area* designated for these purposes.

(c) The minimum tree size used in a *vehicular use area* shall be 24-inch box, or if palm trees are used they shall be 8-foot brown trunk height. If palm trees are used to meet the *vehicular use area* tree requirements, a palm tree shall be within 15 feet of each parking space.

(d) Landscaped areas may be counted toward the required planting area if they comply with the following:

(1) The planting area is bounded on two or more sides by parking spaces or parking accessways, or is within 10 feet of the side of any parking space, and

(2) The planting area is greater than 30 square feet in size and has no dimension less than 3 feet.

(Added 12-9-1997 by O-18451 N.S.; effective 1-1-2000.)

§142.0408 Temporary Vehicular Use Area Requirements

When new temporary *vehicular use areas* are subject to this section in accordance with Table 142-04A, the planting requirements of this section shall apply.

(a) *Vehicular use areas* that have a specified time limit for discontinuance that is less than 5 years after the date of Building Permit issuance are considered temporary vehicle use areas.

(b) Temporary *vehicular use areas* shall provide a 3-foot-wide planting area between the *public right-of-way* and the *vehicular use area*. This area shall be planted with evergreen shrubs that achieve a minimum height of 30 inches within 2 years of installation over at least 50 percent of the required planting area. The remaining area shall be covered with mulch. Vehicle access into this planting area shall be prevented by a 6-inch-high curb or wheel stops placed within the parking spaces, 2 feet from the edge of the planting area. The planting area may be paved at designated vehicle access points.

(c) *Vehicular use areas* that do not have a specified time limit for discontinuance or that are proposed to exist more than 5 years after the date of Building Permit issuance, are subject to the requirements for a permanent *vehicular use area* contained in Sections 142.0406 and 142.0407.

(Added 12-9-1997 by O-18451 N.S.; effective 1-1-2000.)

§142.0409 Street Tree and Public Right-of-Way Requirements

(a) Street Tree Requirements

When new *structures*, additions to *structures*, *condominium conversions*, or new *vehicular use areas* are subject to this section in accordance with Table 142-04A, street trees within the *parkway* shall be provided in accordance with the following regulations.

(1) Street Tree Quantity. Street trees shall be planted between the curb and *abutting property line*. The number of required street trees shall be calculated at the rate of one 24-inch box tree for every 30 feet of *street frontage*. The installed tree spacing may be varied to accommodate site conditions or design considerations; however, the number of trees required for each *street frontage* on a *lot* bounded by more than one *street* shall be planted along the corresponding *street frontage*. Where site conditions do not allow the installation of the street trees required by this section in the *parkway*, trees may be located on the private property within 10 feet of the property line along that street frontage. Where palm trees are proposed to satisfy this requirement in accordance with Section 142.0409(a)(3), they shall be planted at a rate of one 10-foot brown trunk height palm for each 20 feet of *street frontage*. For projects in the IL and IH zones that have loading docks along more than 25 percent of the building *street wall*, the street tree requirement shall be increased to the rate of one 24-inch box tree for every 20 feet of *street frontage* or one 10-foot brown trunk height palm for each 10 feet of *street frontage*.

(2) Street Tree Locations

(A) Street trees shall be located 7 feet from the face of curb on *streets* classified in the applicable *land use plan* as major *streets*, primary arterials, or expressways that have a posted speed of 50 miles per hour or greater. For all other *street* classifications, street trees shall be located no closer than 30 inches to the face of curb or within median islands, no closer than four feet to the face of curb.

(B) Street trees shall be separated from improvements by the minimum distance shown in Table 142-04E.

Table 142-04E

Minimum Tree Separation Distance

Improvement	Minimum Distance to Street Tree
Traffic signal, Stop Sign	20 feet
Underground Utility Lines (except sewer)	5 feet
Sewer Lines	10 feet
Above Ground Utility *Structures* (Transformers, Hydrants, Utility poles, etc)	10 feet
Driveways	10 feet
Intersections (intersecting curb lines of two streets)	25 feet

(C) Trees shall be selected and located so that at maturity they do not cause damage or conflict with overhead utility lines.

(3) Street Tree Species Selection. Trees shall be selected in accordance with the landscape standards of the Land Development Manual. Palm trees may only be used to satisfy the street tree requirement where identified as an acceptable street tree species in an adopted *land use plan*.

(b) Additional *Public Right-of-Way* Regulations

(1) Areas within the *public right-of-way* that are not paved for required pedestrian walks or for vehicle access shall be planted or covered with mulch, unattached unit pavers, or other permeable material acceptable to the City.

(2) Plant material, other than trees, within the *public right-of-way* that is located within *visibility areas* shall not exceed 24 inches in height, measured from the top of the adjacent curb.

(Added 12-9-1997 by O-18451 N.S.; effective 1-1-2000.)
(Amended 7-5-2006 by O-19505 N.S.; effective 8-5-2006.)
(Amended 11-13-08 by O-19800 N.S; effective 12-13-2008.)

EDITORS NOTE: The Land Development Manual includes:
Coastal Bluffs and Beaches Guidelines
Biology Guidelines
Historical Resources Guidelines
Submittal Requirements for Deviations within the Coastal Overlay Zone

See RR-292248 for the Coastal Bluffs and Beaches Guidelines of the Land Development Code; RR-292249 for the Biology Guidelines of the Land Development Code; RR-292250 for the Historical Resources Guidelines of the Land Development Code; RR-292251 for the Submittal Requirements for Deviations within the Coastal Overlay Zone of the Land Development Code.

§142.0410 Previously Conforming Properties Landscape Requirements

(a) When additions to *structures* or additional *structures* on developed properties are subject to this section in accordance with Table 142-04A, they shall meet the requirements of this section. The required *street yard*, *remaining yard*, and *vehicular use area* planting areas and plant points for *previously conforming* properties are established in accordance with the following formula.

(1) Determine the percentage of increase in *gross floor area* for the *development* by dividing the proposed additional *gross floor area* by the existing *gross floor area*.

(2) Where the percentage of *gross floor area* increase is:

(A) 100 percent or greater, the *development* is subject to the full requirements for new *development*.

(B) 75 to 99 percent, the *development* is subject to the full requirements for street trees, the *street yard*, and the *vehicular use area* in the *street yard* and *remaining yard* for new *development*.

(C) 50 to 74 percent, the *development* is subject to the full requirements for street trees, the *street yard*, and the *vehicular use area* in the *street yard* for new *development*.

(D) 1 to 49 percent, the *development* is subject to the full requirements for street trees and the *street yard* for new *development*.

(3) For properties that contain plant materials that will be retained, the planting area and number of points for the existing material will be credited towards the above requirements.

(b) When additions or modifications to existing permanent or temporary parking and *vehicular use areas* are subject to this section in accordance with Table 142-04A they shall meet the requirements of this section. The required *vehicular use area* planting area and plant points for *previously conforming* properties is established in accordance with the following formula.

(1) Determine the percentage of increase in parking spaces for the *development* by dividing the proposed increase in number of parking spaces by the existing number of parking spaces.

(2) Where the percentage of parking space increase is:

(A) 100 percent or greater, the *development* is subject to the full requirements for new *development*.

(B) 75 to 99 percent, the *development* is subject to the full requirements for street trees, the *street yard*, and the *vehicular use area* in the *street yard* and *remaining yard* for new *development*.

(C) 50 to 74 percent, the *development* is subject to the full requirements for street trees, the *street yard*, and the *vehicular use area* in the *street yard* for new *development*.

(D) 1 to 49 percent, the *development* is subject to the full requirements for street trees and the *vehicular use area* requirements for the additional *vehicular use area* only.

(3) For properties that contain plant materials that will be retained, calculate the planting area and number of points for the existing material and use this as a credit towards the above requirements.

(Added 12-9-1997 by O-18451 N.S.; effective 1-1-2000.)

§142.0411 Revegetation and Erosion Control

(a) Permanent Revegetation. All graded, disturbed, or eroded areas that will not be permanently paved or covered by structures shall be permanently revegetated and irrigated as shown in Table 142-04F and in accordance with the standards in the Land Development Manual.

Table 142-04F
Permanent Revegetation and Irrigation Requirements

Location of Disturbed Area	Slope of Disturbed Area	Required IrrigtionSystem	Required Revegetation or Erosion Control
Within 100 feet of areas with native or naturalized vegetation	Less than 4:1 (4 horizontal feet to 1 vertical foot)	Automatic, above grade, temporary irrigation system	Native or naturalized hydroseed mix
	4:1 or greater with a slope height of 15 feet or less	Automatic, above grade, temporary irrigation system	Native or naturalized ground cover consisting of rooted cuttings or hydroseed mix
	4:1 or greater with a slope height over 15 feet	Automatic, above grade, temporary irrigation system	Native or naturalized ground cover consisting of rooted cuttings or hydroseed mix, and native or naturalized trees and shrubs (minimum 1 gallon size) planted at a minimum rate of one plant per 100 square feet of disturbed area
100 feet or further from areas with native or naturalized vegetation	Less than 4:1 (4 horizontal feet to 1 vertical foot)	Automatic, below grade, permanent system or automatic, above grade, temporary irrigation system	Hydroseed, mulch, or equivalent
	4:1 or greater with a slope height of 15 feet or less	Automatic, below grade, permanent irrigation system	Drought tolerant groundcover consisting of rooted cuttings or hydroseed mix
	4:1 or greater with a slope height over 15 feet	Automatic, below grade, permanent irrigation system	Drought tolerant groundcover consisting of rooted cuttings or hydroseed mix, and drought tolerant trees and shrubs (minimum 1 gallon size) planted at a minimum rate of one plant per 100 square feet of disturbed area

(b) Temporary Revegetation. Graded, disturbed, or eroded areas that will not be permanently paved, covered by *structure*, or planted for a period over 90 calendar days shall be temporarily revegetated with a non-irrigated hydroseed mix, ground cover, or equivalent material. Temporary irrigation systems may be used to establish the vegetation.

(c) All required revegetation and erosion control shall be completed within 90 calendar days of the completion of *grading* or disturbance.

(Added 12-9-1997 by O-18451 N.S.; effective 1-1-2000.)

EDITORS NOTE: The Land Development Manual includes:
Coastal Bluffs and Beaches Guidelines
Biology Guidelines
Historical Resources Guidelines
Submittal Requirements for Deviations within the Coastal Overlay Zone

See RR-292248 for the Coastal Bluffs and Beaches Guidelines of the Land Development Code; RR-292249 for the Biology Guidelines of the Land Development Code; RR-292250 for the Historical Resources Guidelines of the Land Development Code; RR-292251 for the Submittal Requirements for Deviations within the Coastal Overlay Zone of the Land Development Code.

§142.0412 Brush Management

Brush management is required in all base zones on publicly or privately owned *premises* that are within 100 feet of a *structure* and contain native or naturalized vegetation.

(a) Brush management activity is permitted within *environmentally sensitive lands* (except for *wetlands*) that are located within 100 feet of an existing *structure* in accordance with Section 143.0110(c)(7). Brush management in *wetlands* may be requested with a *development permit* in accordance with Section 143.0110 where the Fire Chief deems brush management necessary in accordance with Section 142.0412(i). Where brush management in *wetlands* is deemed necessary by the Fire Chief, that brush management shall not qualify for an exemption under the Environmentally Sensitive Lands Regulations, Section 143.0110(c)(7).

(b) Brush Management Zones. Where brush management is required, a comprehensive program shall be implemented that reduces fire hazards around *structures* by providing an effective fire break between all *structures* and contiguous areas of native or naturalized vegetation. This fire break shall consist of two distinct brush management areas called "Zone One" and "Zone Two" as shown in Diagram 142-04E.

Diagram 142-04E

Brush Management Zones

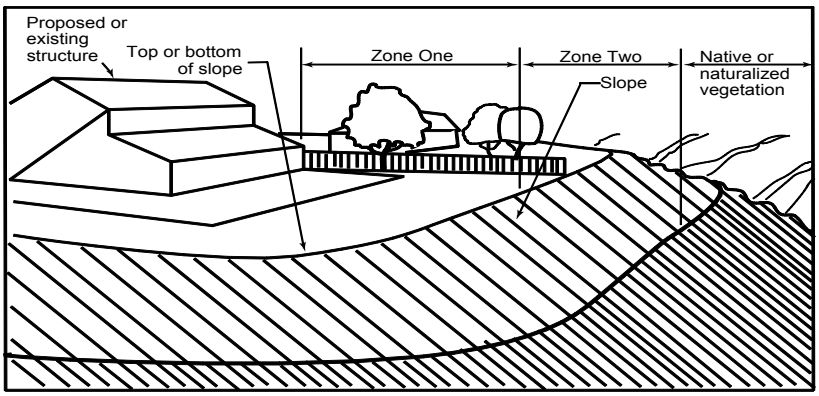

(1) Brush management Zone One is the area adjacent to the structure, shall be least flammable, and shall typically consist of pavement and permanently irrigated ornamental planting. Brush management Zone One shall not be allowed on slopes with gradient greater than 4:1 (4 horizontal feet to 1 vertical foot) unless the property received *tentative map* approval before November 15, 1989. However, within the Coastal Overlay Zone *coastal development* shall be subject to the *encroachment* limitations set forth in Section 143.0142(a)(4) of the Environmentally Sensitive Lands Regulations.

(2) Brush management Zone Two is the area between Zone One and any area of native or naturalized vegetation and typically consists of thinned, native or naturalized non-irrigated vegetation.

(c) The width of Zone One and Zone Two shall not exceed 100 feet and shall meet the width requirements in Table 142-04H unless modified based on existing conditions pursuant to Section 142.0412(i) and the following:

(1) The establishment of brush management Zones One and Two for new *development* shall be addressed in a site-specific plan to include all creative site and/or structural design features to minimize impacts to undisturbed native vegetation. Both Zone One and Zone Two shall be provided on the subject property unless a recorded easement is granted by an adjacent property owner to the owner of the subject property to establish and maintain the required brush management zone(s) on the adjacent property in perpetuity.

(2) Where Zone Two is located within City-owned property, a Right-of-Entry shall be executed in accordance with Section 63.0103 prior to any brush management activity. Zone Two brush management is not permitted in City-owned open space for new *development* proposals. For properties in the Coastal Overlay Zone, additional requirements for new *subdivisions* are found in Section 142.0412 (n).

Table 142-04H
Brush Management Zone Width Requirements

Criteria		
	Zone Widths	
Zone One Width	35 ft.	
Zone Two Width	65 ft.	

(d) Brush management activities are prohibited within coastal sage scrub, maritime succulent scrub, and coastal sage-chaparral habitats from March 1 through August 15, except where documented to the satisfaction of the City Manager that the thinning would be consistent with conditions of species coverage described in the City of San Diego's MSCP Subarea Plan.

(e) Where Zone One width is required adjacent to the *MHPA* or within the Coastal Overlay Zone, any of the following modifications to development regulations of the Land Development Code or standards in the Land Development Manual are permitted to accommodate the increase in width:

(1) The required front *yard setback* of the base zone may be reduced by 5 feet,

(2) A sidewalk may be eliminated from one side of the *public right-of-way* and the minimum required *public right-of-way* width may be reduced by 5 feet, or

(3) The overall minimum pavement and *public right-of-way* width may be reduced in accordance with the Street Design Standards of the Land Development Manual.

(f) The Zone Two width may be decreased by 1½ feet for each 1 foot of increase in Zone One width up to a maximum reduction of 30 feet of Zone Two width.

(g) Zone One Requirements

(1) The required Zone One width shall be provided between native or naturalized vegetation and any *structure* and shall be measured from the exterior of the *structure* to the vegetation.

(2) Zone One shall contain no habitable *structures*, *structures* that are directly attached to habitable *structures*, or other combustible construction that provides a means for transmitting fire to the habitable *structures*. *Structures* such as *fences*, walls, palapas, play structures, and non-habitable gazebos that are located within brush management Zone One shall be of noncombustible, one hour fire-rated or heavy timber construction.

(3) Plants within Zone One shall be primarily low-growing and less than 4 feet in height with the exception of trees. Plants shall be low-fuel and fire-resistive.

(4) Trees within Zone One shall be located away from *structures* to a minimum distance of 10 feet as measured from the *structures* to the drip line of the tree at maturity in accordance with the Landscape Standards of the Land Development Manual.

(5) Permanent irrigation is required for all planting areas within Zone One except as follows:

(A) When planting areas contain only species that do not grow taller than 24 inches in height, or

(B) When planting areas contain only native or naturalized species that are not summer-dormant and have a maximum height at plant maturity of less than 24 inches.

(6) Zone One irrigation overspray and runoff shall not be allowed into adjacent areas of native or naturalized vegetation.

(7) Zone One shall be maintained on a regular basis by pruning and thinning plants, controlling weeds, and maintaining irrigation systems.

(h) Zone Two Requirements

(1) The required Zone Two width shall be provided between Zone One and the undisturbed, native or naturalized vegetation, and shall be measured from the edge of Zone One that is farthest from the habitable *structure*, to the edge of undisturbed vegetation.

(2) No *structures* shall be constructed in Zone Two.

(3) Within Zone Two, 50 percent of the plants over 24 inches in height shall be cut and cleared to a height of 6 inches.

(4) Within Zone Two, all plants remaining after 50 percent are reduced in height, shall be pruned to reduce fuel loading in accordance with the Landscape Standards in the Land Development Manual. Non-native plants shall be pruned before native plants are pruned.

(5) The following standards shall be used where Zone Two is in an area previously *graded* as part of legal *development* activity and is proposed to be planted with new plant material instead of *clearing* existing native or naturalized vegetation:

(A) All new plant material for Zone Two shall be native, low-fuel, and fire-resistive. No non-native plant material may be planted in Zone Two either inside the MHPA or in the Coastal Overlay Zone, adjacent to areas containing *sensitive biological resources*.

(B) New plants shall be low-growing with a maximum height at maturity of 24 inches. Single specimens of fire resistive native trees and tree form shrubs may exceed this limitation if they are located to reduce the chance of transmitting fire from native or naturalized vegetation to habitable *structures* and if the vertical distance between the lowest branches of the trees and the top of adjacent plants are three times the height of the adjacent plants to reduce the spread of fire through ladder fueling.

(C) All new Zone Two plantings shall irrigated temporarily until established to the satisfaction of the City Manager. Only low-flow, low-gallonage spray heads may be used in Zone Two. Overspray and runoff from the irrigation shall not drift or flow into adjacent areas of native or naturalized vegetation. Temporary irrigation systems shall be removed upon approved establishment of the plantings. Permanent irrigation is not allowed in Zone Two.

(D) Where Zone Two is being revegetated as a requirement of Section 142.0411(a), revegetation shall comply with the spacing standards in the Land Development Manual. Fifty percent of the planting area shall be planted with material that does not grow taller than 24 inches. The remaining planting area may be planted with taller material, but this material shall be maintained in accordance with the requirements for existing plant material in Zone Two.

(6) Zone Two shall be maintained on a regular basis by pruning and thinning plants, removing invasive species, and controlling weeds.

(7) Except as provided in Section 142.0412(i), where the required Zone One width shown in Table 142-04H cannot be provided on *premises* with existing *structures*, the required Zone Two width shall be increased by one foot for each foot of required Zone One width that cannot be provided.

(i) An *applicant* may request approval of alternative compliance for brush management in accordance with Process One if all of the following conditions exist:

(1) The proposed alternative compliance provides sufficient defensible space between all *structures* on the *premises* and contiguous areas of native or naturalized vegetation as demonstrated to the satisfaction of the Fire Chief based on documentation that addresses the topography of the site, existing and potential fuel load, and other characteristics related to fire protection and the context of the proposed *development*.

(2) The proposed alternative compliance minimizes impacts to undisturbed native or naturalized vegetation where possible while still meeting the purpose and intent of Section 142.0412 to reduce fire hazards around *structures* and provide an effective fire break.

(3) The proposed alternative compliance is not detrimental to the public health, safety, and welfare of persons residing or working in the area.

(j) If the Fire Chief approves alternative compliance in accordance with this section, the modifications shall be recorded with the approved permit conditions if approved as part of a *development permit*, or noted in the permit file if approved as part of a *construction permit*.

(k) For existing *structures*, the Fire Chief may require brush management in compliance with this section for any area, independent of size, location, or condition if it is determined that an imminent fire hazard exists.

(l) Brush management for existing *structures* shall be performed by the owner of the property that contains the native and naturalized vegetation. This requirement is independent of whether the *structure* being protected by brush management is owned by the property owner subject to these requirements or is on neighboring property.

(m) Where specifically authorized by the Fire Chief, goats may be used for brush management in accordance with the following:

(1) In order to prevent escapes, harassment from predators or humans, or over browsing, goats shall be managed and monitored 24-hours a day by a contractor with at least two years experience in raising, handling, and controlling of goats. The goat contractor shall maintain a minimum of $1 million of liability insurance subject to approval by the Office of the City Attorney.

(2) At least 10 business days prior to using goats for brush management, the property owner shall apply to the Fire Rescue Department for a permit to use goats for brush management. The *applicant* shall:

(A) Obtain and submit written permission from the owner of any property through which the goats must gain access to the area to be browsed.

(B) Provide written notice to the Fire Chief and all owners and residents of property located immediately adjacent to the area to be browsed. This notice shall identify Sections 44.0307 and 142.0412(m) as the authority for temporary use of goats.

(C) Provide photographs of the existing condition of the site, and a plan describing the methods to be employed and measures to retain existing vegetation in compliance with Section 142.0412(h).

(3) The area to be browsed shall be measured, staked, and appropriately fenced with temporary electrically charged fencing to delineate the Zone Two brush management areas. Signs must be posted at 25-foot intervals along the fence warning of the possibility of mild electric shock.

(4) The timing of brush management activities shall comply with Section 142.0412(d).

(5) While goats are browsing:

(A) No more than 75 goats are permitted on a single acre of the *premises*.

(B) Goats shall be moved along periodically so that no more than 50 percent of the vegetation is thinned or reduced.

(C) The goats shall remain within a secure enclosure at all times.

(D) Goats shall be moved into a separate holding pen at night, which shall be located the maximum distance reasonably practicable from residences.

(E) Droppings in the holding pen, and to the extent reasonably possible within the brush management area, shall be removed and properly disposed of daily in accordance with Section 44.0307.

(F) The goats shall be used for brush management only and shall be immediately removed when the brush thinning has been accomplished.

(6) No later than 5 business days from the date of removal of the goats, the *applicant* shall notify the Fire Chief in writing of the removal of the goats.

(7) The Fire Rescue Department shall not approve any permit under Section 142.0412(m) that will utilize a contractor determined by the City Manager to have negligently performed brush management services within the three prior calendar years. All facts supporting such a determination shall be provided to the *applicant* in writing, and shall constitute a final determination on the City's behalf.

(n) Within the Coastal Overlay Zone, brush management for new *subdivisions* shall not be permitted to encroach into an environmentally sensitive habitat area [ESHA], except that *encroachment* may be permitted where necessary to achieve a maximum *development* area of 25 percent including Zones One and Two. For purposes of this Section, ESHA shall include southern fordunes, torrey pines forest, coastal bluff scrub, maritime succulent scrub, maritime chaparral, native grasslands, oak woodlands, coastal sage scrub and coastal sage scrub/communities, and any vegetative communities that support threatened or endangered species.

(o) Violations and Remedies

(1) The provisions of this division shall be enforced pursuant to Chapter 12, Article 1, Division 2 (Enforcement Authorities for the Land Development Code), and Chapter 12, Article 1, Division 3 (Violations of the Land Development Code and General Remedies).

(2) In accordance with Section 121.0312, the City Manager may order reasonable restoration of the *premises* and any adjacent affected site to its lawful condition or may require reasonable mitigation at the sole cost of the responsible person.

(Added 12-9-1997 by O-18451 N.S.; amended 10-18-1999 by O-18691 N.S.; effective 1-1-2000.)
(Amended 9-19-2005 by O-19413 N.S.; effective10-19-2005.)
(Amended 6-15-2007 by O-19624 N.S.; effective 7-15-2007.)
(Amended 1-15-2008 by O-19698 N.S.; effective 2-14-2008.)
(Amended 7-28-2009 by O-19885 N.S; effective 8-27-2009.)
(Amended 8-4-2011 by O-20081 N.S.; effective 10-6-2011.)
(Amended 7-31-2012 by O-20187 N.S.; effective 8-30-2012.)
(Amended 6-18-2013 by O-20261 N.S.; effective 7-19-2013.)

[**Editors Note Section 142.0412.** Resolution R-303274 was adopted by City Council to temporarily allow goat monitoring in the coastal overlay zone for a 5 year trial period during which annual monitoring reports would be distributed to the Coastal Commission. If at the end of 5 years, monitoring reports indicate that the use of goats has adversely impacted ESHA, the use of goats in the coastal zone would be discontinued.]

§142.0413 Water Conservation

(a) Landscape Area. For the purposes of Section 142.0413, landscape area means the entire *premises*, less the area of building footprints, non-irrigated portions of parking lots, driveways, *hardscapes*, and areas designated for habitat preservation or brush management Zone Two.

(b) Lawn Requirements.

(1) Lawn areas shall not exceed 10 percent of the landscape area on a *premises*, excluding required common areas, active recreation areas, and areas located within the *public right-of-way* between the curb and public sidewalk. This restriction does not apply to *single dwelling units*.

(2) Lawn areas bounded by impervious surfaces on two or more sides must have minimum dimensions of 8 feet in all directions unless subsurface or low volume irrigation is used.

(3) Lawn areas located on slopes, where the toe of the slope is adjacent to *hardscape*, shall not exceed a gradient of 25 percent (4:1).

(c) Mulch Requirements. All required planting areas and all exposed soil areas without vegetation shall be covered with mulch to a minimum depth of 3 inches, excluding slopes.

(d) Water Budget.

(1) All new *development* with a landscape area of 500 square feet or greater shall be subject to a Maximum Applied Water Allowance (MAWA) Water Budget, except as provided in Section 142.0413(h).

(2) The Maximum Applied Water Allowance Water Budget is calculated using the following formula (see Landscape Standards of the Land Development Manual for additional information):

MAWA Water Budget = (ETo)(0.62) [(ETAF)(LA) + (1-ETAF)(SLA)]

For residential landscape areas = (ETo)(0.62)[(0.55)(LA) + (0.45)(SLA)]

For non-residential landscape areas = (ETo)(0.62) [(0.45)(LA) + (0.55)(SLA)]

Legend for MAWA Water Budget Calculation Formula

Symbol	Meaning of Symbol
ETo	Evapotranspiration measured in inches per year; see Table 6 ETo Table
0.62	Conversion factor to gallons
ETAF 0.55 for Residential areas; 0.45 for Non-residential areas	Evapotranspiration Adjustment Factor
LA	Landscape Area measured in square feet
1- ETAF 0.45 for Residential areas; 0.55 for Non-residential areas	Additional Evapotranspiration Adjustment Factor for Special Landscape Areas and Reclaimed Water
SLA	Special Landscape Area measured in square feet

(3) The irrigation system is required to be operated within the approved MAWA Water Budget.

(4) The Estimated Total Water Use (ETWU), as calculated in Section 2.6 of the Landscape Standards of the Land Development Manual shall not exceed the MAWA Water Budget as calculated in Section 142.0413(d)(2).

(e) Water Meters.

(1) Dedicated landscape irrigation meters shall be required in all new *development* with a landscape area greater than or equal to 1,000 square feet; except that this requirement shall not apply to *single dwelling unit development* or to the commercial production of agricultural crops or livestock.

(2) Landscape irrigation submeters shall be required in the following *developments*:

(A) New *single dwelling unit development*;

(B) Improvements to existing industrial, commercial and *multiple dwelling unit development* when:

(i) The improvement requires a building permit as identified in Table 142-04A; and

(ii) The landscape area is 1,000 square feet and greater.

(f) Irrigation Audit. An *applicant* subject to the requirement for a MAWA Water Budget is required to conduct and submit to the City an irrigation audit consistent with Section 2.7 of the Landscape Standards of the Land Development Manual.

(1) All irrigation audits shall be conducted by a professional authorized by the State to perform this work.

(2) The irrigation audit shall certify that all plant material, irrigation systems, and landscape features have been installed and operate as approved by the City; and shall be submitted to the City prior to occupancy and use.

(g) Reclaimed water. *Development* in areas where reclaimed water is available and suitable for irrigation shall provide for a dual water distribution system for all landscaped areas. Only reclaimed water shall be used for irrigation purposes where it is available.

(h) Pursuant to state law (California Code of Regulations section 490.1), an *applicant* with a project with an aggregate landscape area of 2,500 square feet or less may alternatively comply, if the *applicant* demonstrates, to the satisfaction of the Development Services Director, that the landscape area for the *development* will comply with all of the following instead of Section 142.0413(a) through (g):

(1) Incorporates compost at a rate of at least 4 cubic yards per 1,000 square feet to a total depth of 6 inches (unless contraindicated by a soil test).

(2) Includes climate adapted plants that meet the following:

(A) All plant species are identified on the Water Use Classification of Landscape Species (WUCOLS) list as requiring little or no summer water and have an average plant factor of 0.3; and

(B) The minimum plant area for the climate adapted plants is at least 75 percent of the total plant area for residential *development* or 100 percent for non-residential *development.* Plant areas used for edibles or areas where recycled water is used for irrigation may be excluded from the calculation of total plant area.

(3) Incorporates a minimum 3-inch layer of mulch on all exposed soil surfaces of planting areas, except in turf areas, creeping or rooting groundcovers, or direct seeding applications where mulch is contraindicated.

(4) Minimizes the use of turf as follows:

(A) Turf is not permitted for non-residential *development* or in parkways less than 10 feet wide, unless the *parkway* is adjacent to a parking strip and used to enter and exit vehicles and is irrigated by subsurface irrigation (or equivalent system that creates no overspray or runoff).

(B) Turf for residential *development* landscape areas shall not exceed 25 percent of the landscape area and shall not be planted on sloped areas that exceed a slope of 1-foot vertical elevation change for every 4 feet horizontal length.

(5) Provides an irrigation system that meets all of the following requirements:

(A) Includes an automatic irrigation controller that utilizes a rain sensor and evapotranspiration or soil moisture sensor data, and that does not lose programming data if in the event a primary power source is interrupted;

(B) Includes a pressure regulator to ensure the dynamic pressure of the system is within the manufacturer's recommended pressure range;

(C) Includes manual shut-off valves (such as a gate valve, ball valve, or butterfly valve) installed as close as possible to the point of connection to the water supply;

(D) Includes irrigation sprinkler and emission devices that meet the State of California Landscape Irrigation Sprinkler and Emitter Standards;

(E) Includes subsurface irrigation (or equivalent system that produces no overspray or runoff) in any landscape areas less than 10 feet in width in any direction; and

(F) Includes a private submeter for any non-residential *development* landscape areas that are 1,000 square feet or more in size.

(6) Incorporates the following statement on the approved landscape plan set:

The *applicant* agrees to comply with the requirements of the prescriptive compliance option to the Model Water Efficient Landscape Ordinance (MWELO) in accordance with state law and Land Development Code Section 142.0413(h), and will provide the record *owner* at the time of final inspection with a certificate of completion, certificate of installation, irrigation schedule, and schedule of landscape and irrigation maintenance.

(Added 12-9-1997 by O-18451 N.S.; effective 1-1-2000.)
(Amended 10-28-2009 by O-19903 N.S; effective 11-27-2009.)
(Amended 6-18-2013 by O-20261 N.S.; effective 7-19-2013.)
(Amended 4-5-2016 by O-20634 N.S.; effective 5-5-2016.)

[Editors Note: Amendments as adopted by O-20634 N.S. will not apply within the Coastal Overlay Zone until the California Coastal Commission certifies it as a Local Coastal Program Amendment.
Click the link to view the Strikeout Ordinance highlighting changes to prior language http://docs.sandiego.gov/municode_strikeout_ord/O-20634-SO.pdf]